THREE•SIXTY•FIVE tm

Coping, Box, & Lid Installation

1 Start with a completed 4" or 5" pool wall system.

Place corners squarely on pool with box end corners in the appropriate orientation as shown.

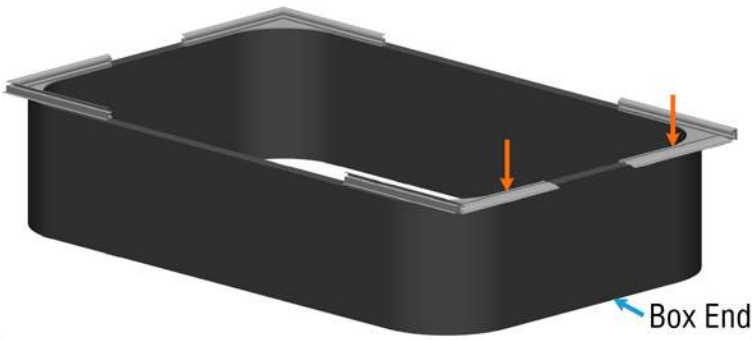

2

Attach corners to pool wall with TEK screws every 12"-18" (no predrilling req'd)

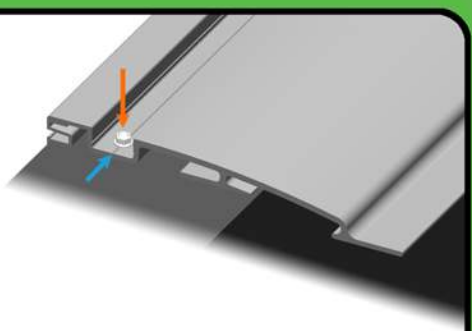

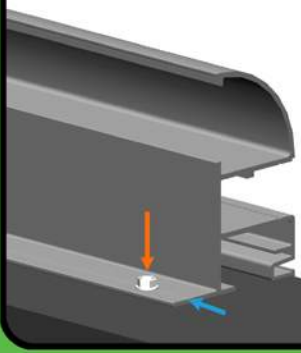

Place screws approximately 1" from end of corners along alignment groove.



3





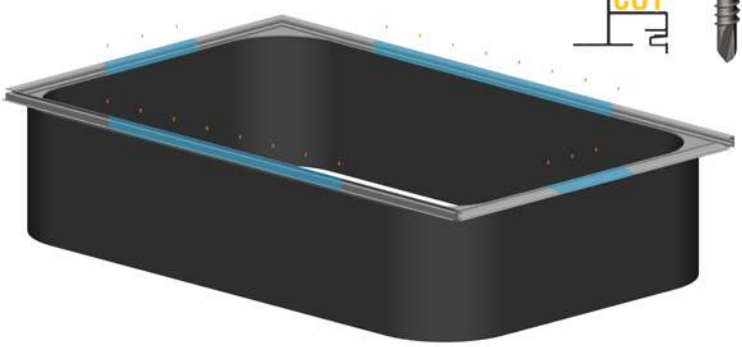

Measure distance between corners. Evenly space sections of coping and wall cap to fill that distance. Cut extrusions with chop saw to provide a uniform, symetrical appearance. Place screws every 18"-24" with a screw 1" on either side of joint.

4

Attach coping clip over every intersection. Make sure to center clip on seam.

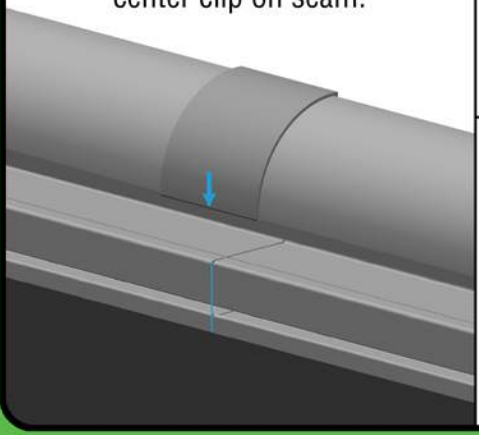

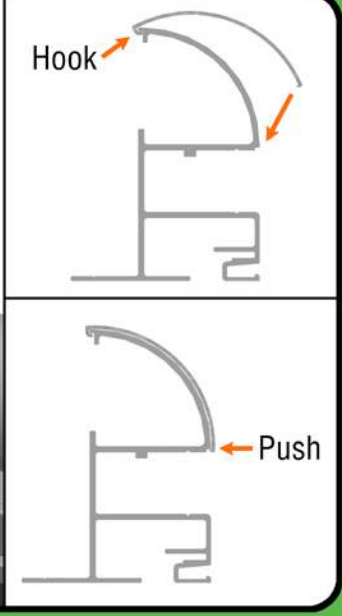

5

For Polymer Box:

Installation of temporary box spacer is quick and easy.



Rotate into slot | Twist to lock | Installed correctly

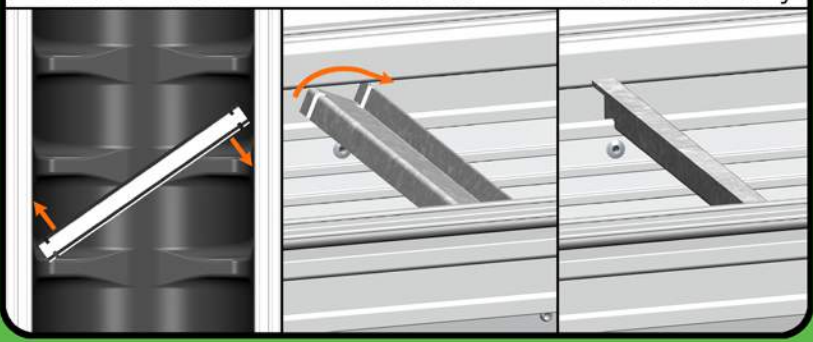

6

Place 2 box spacers in every section of box. Locate them towards the ends of each section.

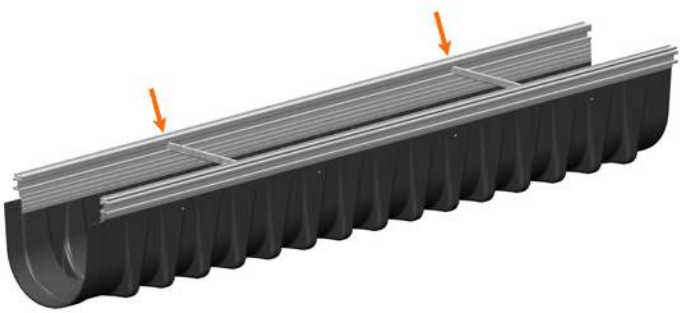

Note: Box spacers are strong and can be used to carry and install box onto pool wallcap.

7

Slide motor end box section onto lip of wallcap as shown. Motor end box will have a drain hole and endcap already attached. Align line (mark) on top rail of box to water side edge of coping. Note: wallcap will support box weight.

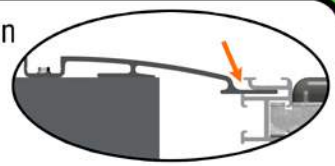

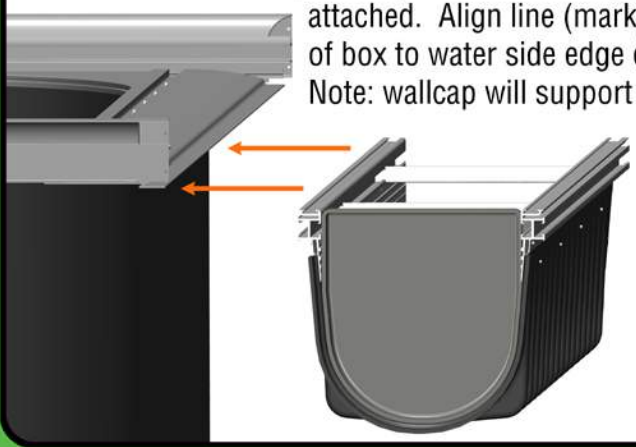

8

Place 2 box splices in outside box rail channels then slide additional box sections onto wallcap as shown. Slide boxes together and attach with 5 screws in the black portion of the box from the inside out.

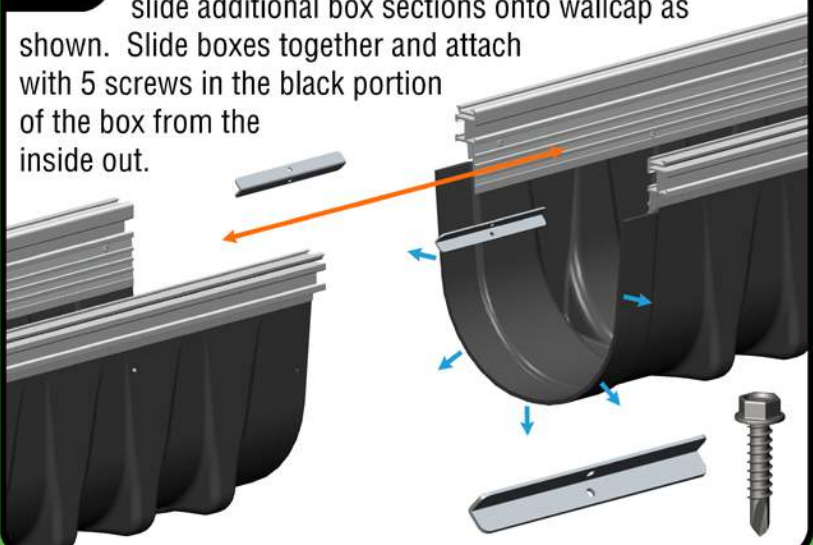

9

Make sure the line on box rail is aligned with water side end of coping. This will set the distance from the inside of coping to end of box at 36".

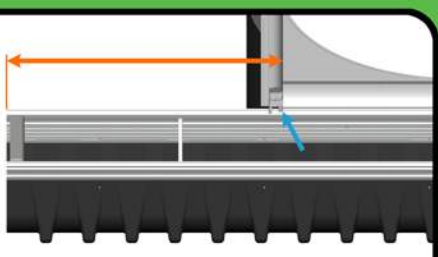

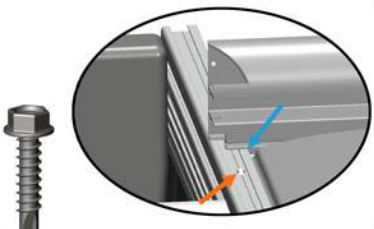

Push box against hard stop on both corners and make sure it's straight throughout length. Secure box to wall cap with screws every 18"-24" with screws on both sides of box rail seams. Screws should be placed along groove in box rail.

10

Place box endcap at end of the assembled box. The distance between endcaps should equal: Pool Width + 48".

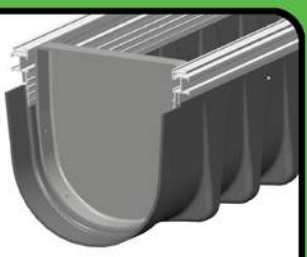



Attach endcap to box with 5 screws from inside out.

11

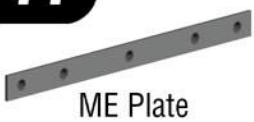

ME Plate



OE Plate

VERY IMPORTANT

On the motor end of the box, slide motor end channel plates (5 hole) into both inside channels. On opposite end of box, slide OE channel plates (3 hole) into both inside channels. Insert plates with smooth side toward inside of box.

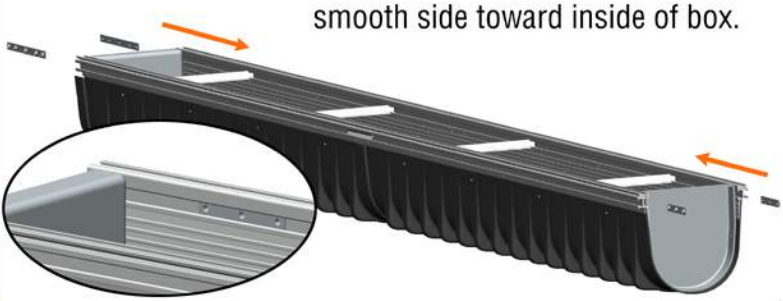

12

Install stake brackets as shown on both ends of each section on the back side of the box and on the front side on the motor end. To install Unistrut nuts, push into channel and twist clockwise.



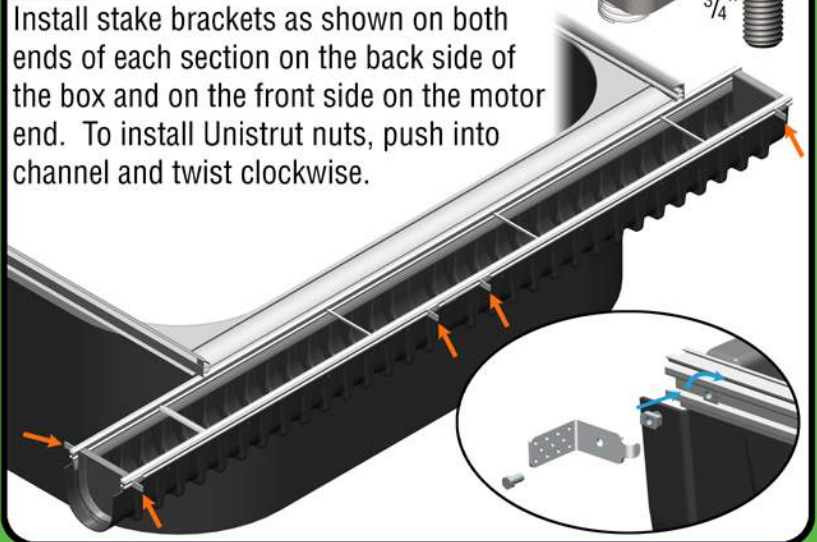

13 Drive wood stakes into ground next to stake brackets. Push stake brackets against stakes and tighten bolts. Level box in both directions as shown below in blue. When box is level, nail or screw through each stake bracket to secure box. Double check entire box to ensure it's level. Now cut top of wood stake flush with top of stake bracket.

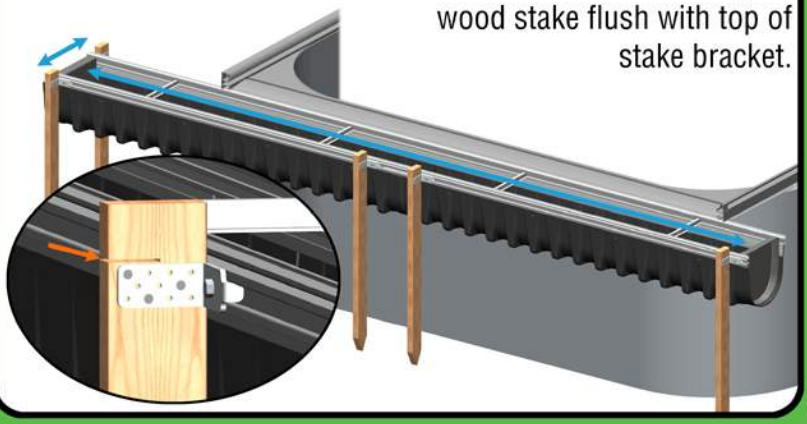

14 Locate the 10" and 32" lid riser sections. The 32" section is for the motor end/ pool side of box and the 10" section is for the non-motor end/ pool side of box. Attach both lid risers to the box flush with coping using a rubber mallet or gentle hammer against the lower lip of lid riser and lock in place.

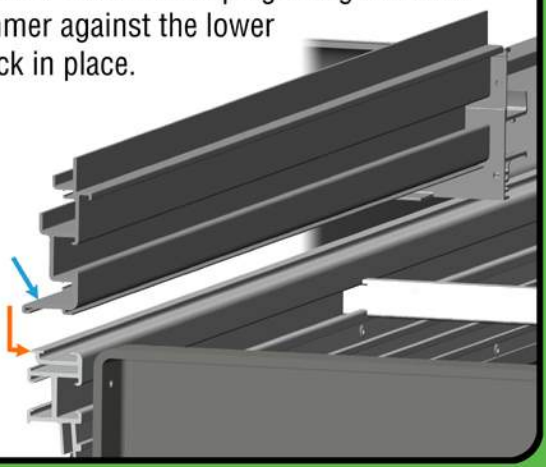

15 Screw through the pool corners into the slots of the lid risers on both sides of the pool.

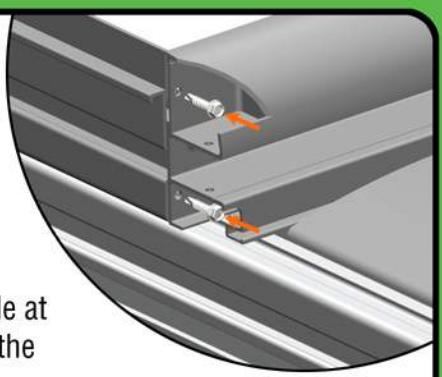

Put a screw on the back side at both ends of each riser in the location groove shown below .

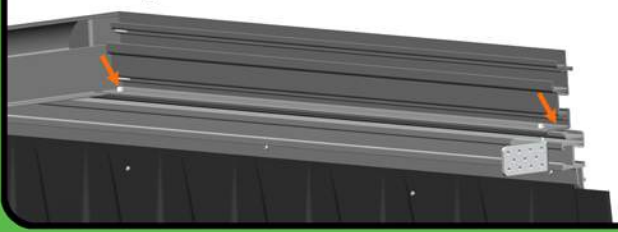



16

Attach the lid riser to the back box rail in the same manner as before using a square to align both ends. Cut riser sections as needed. Secure riser sections at each end and the center with 3 screws.



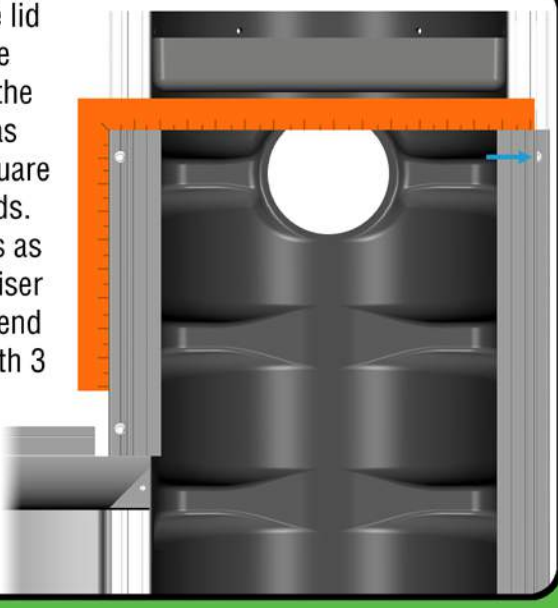

17



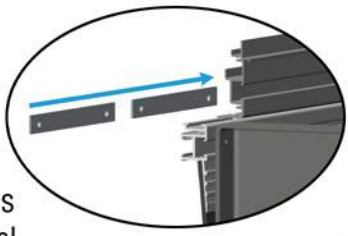

VERY IMPORTANT

Slide all lid bracket channel plates (2 hole) into back **lid riser** channel. Insert plates with smooth side toward inside of box.

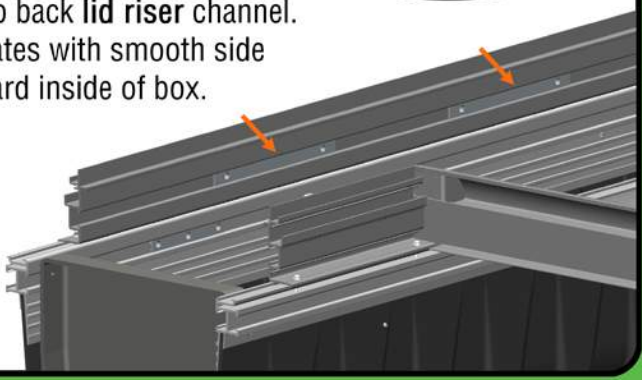

18

Attach the lid riser endcaps to the riser by screwing through the endcap into the slots of the risers on both ends of the box.

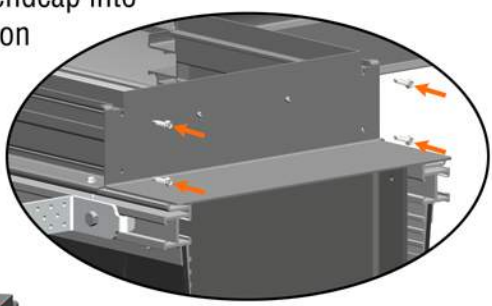

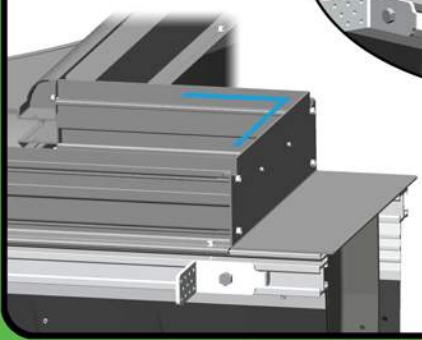

Note: Check to make sure these endcaps are square to ensure proper fit for the following steps.



19

Mount lid brackets to channel plates using supplied 1" bolts. Locate brackets evenly between pool walls at approximately a 60" spacing. Push base up as high as they will go, then tighten the bolts.

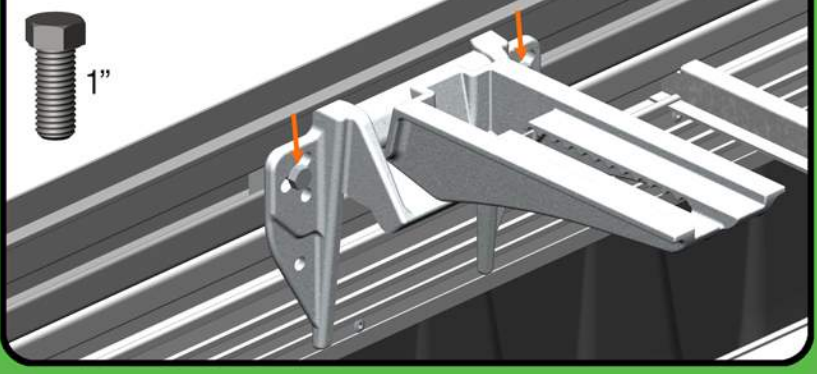

20

Insert the main lid into the lid riser with the clip-in lid fascia channel facing toward the pool. Locate the lid against the lid riser endcap at the opposite end of the box. Use the lid bracket adjustment screws to level the lid brackets to support the lid uniformly.

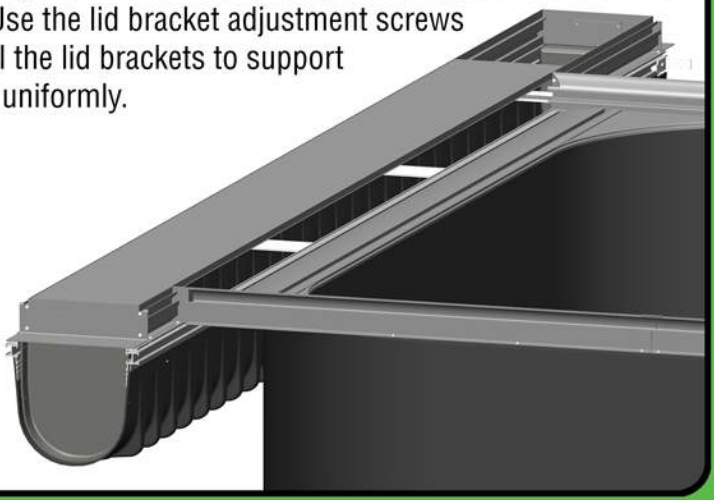

21

Measure the distance between the main lid and the motor end lid riser endcap and subtract 1/16" for clearance. Cut the lid end to this dimension. Make sure that this cut is clean, square and filed!



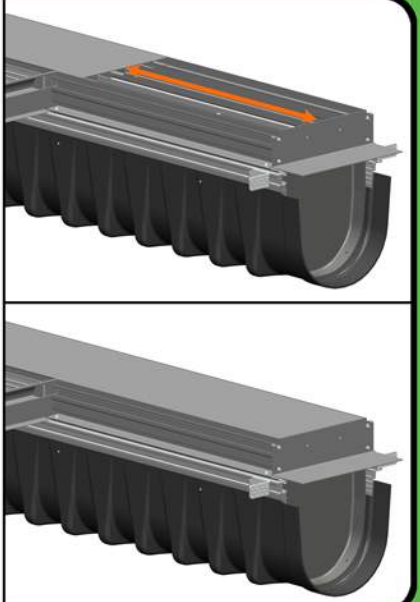

22

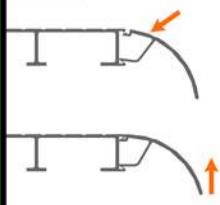

Locate the 51" mitered lid fascia pieces. Clip the appropriate fascia section onto the corresponding side of the pool. Once the fascia pieces are mounted, slide them tight to the side pool coping. Note: Attaching these pieces is best accomplished as shown to the left.

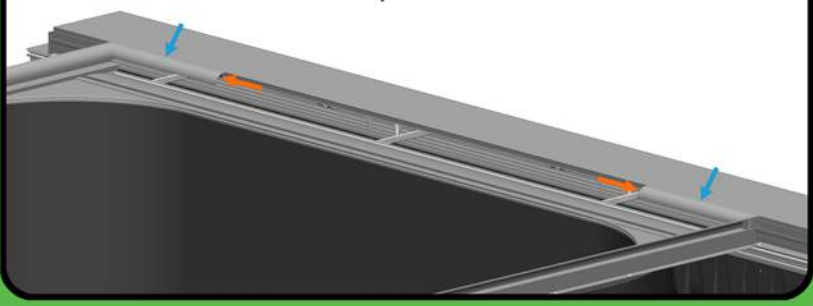

23



Measure the distance between the previously installed lid fascia pieces then cut the long section to fit that dimension tightly. Make sure that this cut is clean and square! After cutting, install in the same manner as before.

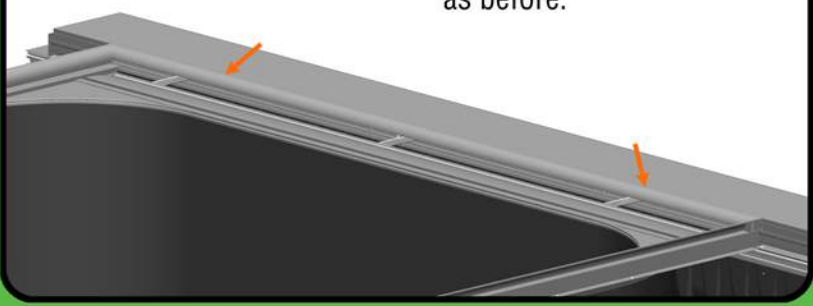

24

Tape off all exposed painted edges to protect from concrete. Make sure to connect drainage pipe and run two 3/4" electrical conduits.

Now, pour and finish your concrete decking.

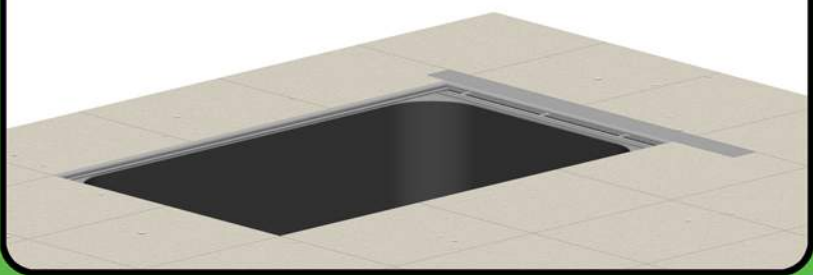

The installation of your coping, box, and lid are now complete.

Congratulations!!!