TENNESSEAN

ABOVE GROUND POOL

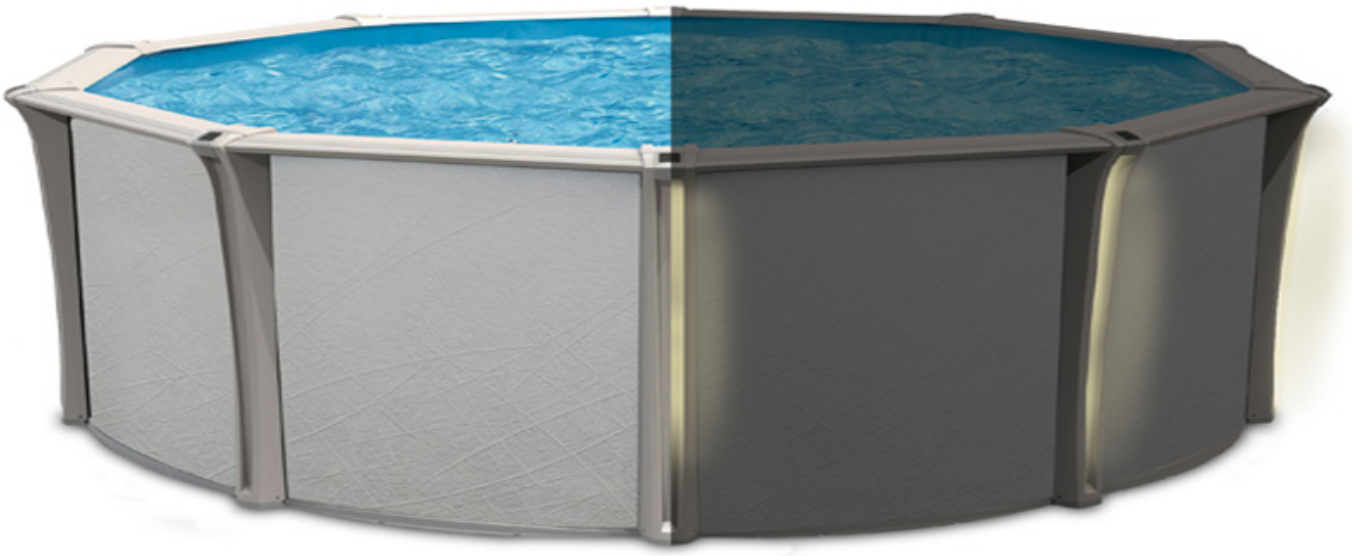

Installation Guide

PoolWarehouse

WARNING : Be sure you have read and understood the “Safety” section

WARNING : For your safety, your pool is not designed for diving and/or jumping in head first. Please do not dive. Diving may result in permanent injury or death.

INSTALLER: Once the installation of the pool is complete, it is important to give this document to the customer in person.

TENNESSEAN ABOVE GROUND ROUND POOL INSTRUCTIONS

ABOVE GROUND POOL SAFETY

WARNING

FAILURE TO HEED THESE WARNINGS CAN RESULT IN PERMANENT INJURY, PARALYSIS FROM A BROKEN NECK, ELECTROCUTION OR DROWNING.
THIS POOL IS NOT DESIGNED FOR DIVING OR JUMPING!
DANGEROUS INJURY CAN RESULT, SHALLOW WATER!

Your pool contains a large quantity of water, and is deep enough to present inherent dangers to life and health unless the following safety rules are strictly observed. First-time users run the highest risk of injury. Make sure everyone understands. To insure your pool is used safely you **must** observe the following safety precautions:

1. NO JUMPING OR DIVING
The top rail of your pool is not a walkway and must not be used for jumping or diving. Do not permit jumping or diving into the pool from a deck or the top rail of the pool. Diving or jumping into the pool can result in serious injury.

2. NEVER USE THE POOL ALONE
Never permit the pool to be used unless it is attended by at least one person other than the bather. Someone should always be available to lend assistance in an emergency.

3. NEVER LEAVE CHILDREN UNATTENDED
Never leave a child alone and unsupervised in or near the pool—not even for a second. There is no substitute for constant adult supervision.

4. NO ROUGH PLAY
Do not permit "rough-playin" in and around your pool. Surfaces can become slippery and hazardous when wet.

5. LIGHT THE POOL AT NIGHT
If the pool is used after dusk, adequate lighting must be provided. Illumination in the pool area must be sufficient to clearly judge pool depth and all features in and around the pool. For lighting recommendations, consult your local licensed electrical contractor

6. RESTRICT ACCESS TO THE POOL
Do not leave chairs or other furniture beside the pool that could be used by a child to climb up into the pool. Ladders must be removed whenever the pool is unattended. A fence with a lockable gate around the pool or yard is strongly recommended and may be required by law in some jurisdictions.

7. NO ALCOHOL OR DRUGS
Never drink alcoholic beverages or use any intoxicants which could hinder your judgment and reflexes.

8. KEEP YOUR POOL CLEAN AND SANITARY
Your filter system will remove suspended particles from the water and the surface skimmer will remove insects, leaves and other debris from the water surface. Use the correct pool chemicals as directed to destroy harmful bacteria and prevent formation of algae. Remember, unsanitary water is a serious health hazard.

9. KEEP OFF TOP LEDGES
Do not walk on top ledges. They can be slippery and they are not a walkway.

10. POOL COVER SAFETY
The cover must have a tamperproof locking retainer cable that positions the cover around the pool wall and keeps it securely in place. Never allow anyone, especially small children on the cover. Asphyxiation or drowning could result. When purchasing any pool cover, please consult a swimming pool professional.

11. ELECTRICAL HAZARD
Never touch or attempt to service electrical equipment, including the filter when your body and/or the ground is wet. Electrocution or permanent injury due to high voltage (120V AC) could result. The pool should be bonded in accordance with Section 680-26 of the National Electical Code. For further assistance contact your dealer or a local licensed electrician. Do not use pool during electrical or rain storms.

12. SAFETY ROPE & POLE
Keep a safety rope 1/4" by 50" with a flotation buoy with an outside diamter of 15". Have accessible in a prominent area by your pool. Keep a pole not less that 16 feet (4,88m) long with a blunt or hook end available at pool side in case of emergencies.

13. POOL CHEMICALS
Do not place chlorine, chlorine tablets or sticks directly into skimmer, or winterize your pool with liquid chlorine. Damage to the skimmer, pool liner and filter will result. Failure to obey this instruction will void all component warranties. Always follow Chemical Manufacturer's insturctions when storing, handling and dispensing pool chemicals.

14. CHECK FOR DAMAGE
Periodically check your pool and ladder components for damage and wear. Be sure all screws are in place. Replace all damaged or worn components and tighten all screws before you use the pool, deck or ladders. At first sign remove rust and touch up immediately.

15. POOL PARTS
Never modify the pool or accessories, or remove or drill holes in the pool, deck or ladder components unless instructed. Your pool wall is made of thin metal, there is an inherent cut hazard with metal so use gloves during installation. Always use Original Equipment Manufactured parts for your replacement parts.

FOLLOW ALL SAFETY INSTRUCTIONS
Read and follow all safety instructions packaged with pool, ladder, deck or any other accessory. Additional pool safety publications can be obtained by contacting: The Association of Pool & Spa Professionals (www.apsp.org)



REMEMBER
WATCH
CHILDREN

IMPORTANT NOTICE READ BEFORE INSTALLATION!
The safety stickers must be installed as per following instructions. Failure to properly install warning labels will void warranty. Failure to mount these safety labels may subject you to substantial liability in case of injury. These warning are not to be removed under any circumstances! If they become discolored or fall off please request replacements which will be sent at no charge.





PLACE SIGN ON LINER ABOVE WATER LINE, OPPOSITE ENTRY TO POOL



PLACE SIGN ON WALL NEXT TO POOL ENTRY

R.12/11

Installation Instructions

HOW TO USE THESE INSTRUCTIONS

Be sure to read these instructions completely before beginning assembly or installation.

This installation sheet covers several sizes of oval pools. Use your pool parts list booklet and the exploded illustrations to identify your pool parts, then read these instructions and follow the assembly steps that pertain to your pool assembly.

The manufacturer (Hil) cannot be responsible for damage caused by careless or improper assembly or installation. Your warranty is void if pool assembly and installation instructions are not followed exactly, or if the pool design is altered in any way.

Contracted Installation

Hil is not affiliated with any professional pool installers and can assume no responsibility for installation mistakes made by the professional installer or the homeowner. If the pool is installed by others, please supervise and make sure the installation complies with proper installation techniques as shown.

Change of Design

Hil expressly reserves the right to change or modify the design and construction of any product in due course of our manufacturing procedures, without incurring any obligation or liability to furnish or install such changes or modifications on products previously or subsequently sold.

CAUTIONS

1. Do not attempt to install pool wall on windy days. An unsupported pool wall can easily blow down and may cause damage to the pool frame, pool wall, or may cause personal injury.

2. When assembling your pool, keep parts not currently used in an area out of the way. Disassembled parts are easily tripped over and may be damaged or cause personal injury.

3. Do not attempt to lift heavy boxes by yourself. To reduce the possibility of personal injury, have someone help you move heavy boxes (pool wall, liner, etc.).

WARNINGS

1. Your pool must be level within 1" all around. An unlevel pool may cause excessive stress on pool frame. This may result in pool failure which could cause serious personal injury.
2. Your pool must be on undisturbed soil. Backfilled soil, sudden slopes within 6 feet, or water run off may undermine or cause pool foundation to shift. This could cause pool failure and may cause serious personal injury.
3. To reduce the risk of severe electrical shock, always have a qualified electrician install a ground fault circuit interrupter (G.F.C.I.). Always plug pool accessories into a G.F.C.I. protected receptacle.
4. Always install the Warning Decals and Warning Sign. The decals are designed to remind you, your friends and loved ones that your pool is to be used for swimming and wading only. Do not allow any form of horse play in or around the pool. Failure to follow this warning can lead to severe personal injury. Read the "Safety First" booklet.
5. Do not use common sand for pool cove. Common sand can easily erode and allow pool liner to rupture which may cause pool failure or personal injury.
6. Secure your pool when not in use. Ladders and gates should be secured to reduce the possibility of unauthorized entry and possible serious accidents.
7. Always repair liner leaks. Continued leakage between pool wall and liner may cause wall damage which eventually may result in pool wall failure. This could result in serious personal injury.
8. To reduce the risk of possible electrical shock, never install your pool under overhead wires.
9. Do not alter pool as pool failure may result and cause serious bodily injury. Your warranty is void if the pool is altered.
10. Do not bury pool or warranty is void.
11. Do not install a diving board, pool slide or any other recreational accessories for use in diving, sliding or jumping into your pool.

Local Codes

Check to see if building permits or utility clearances are required. Comply with safety codes regarding fencing and all electrical codes.

BEFORE YOU START

1. Check prevailing winds. The skimmer should be downwind to aid in removing pool surface debris.
2. Pump and filter location. Allow room to service your pool equipment.
3. Do not install your pool liner on top of anything abrasive. Installing your liner on top of abrasives such as concrete, asphalt, peat moss, tar paper, gravel, or wood could puncture your liner.
4. Do not install your pool liner on top of grass or tree roots. They may grow up through your liner.
5. Do not install your pool on soil that has recently been treated with **petroleum based chemicals**. Some soil treatment chemicals may destroy your pool liner. Consult your pool dealer.
6. Treat the ground inside the pool area with a **non-petroleum based** fungicide (available at garden supply shops). This may help prevent liner staining caused by fungus. Consult your pool dealer.

6. Treat the ground inside the pool area with a **non-petroleum based** fungicide (available at garden supply shops). This may help prevent liner staining caused by fungus. Consult your pool dealer.

7. Rid pool area of burrowing pests and insects such as gophers and termites. They can cause liner damage.

8. Locate a convenient electrical outlet for filter and pump. Always have a qualified electrician install a ground fault circuit interrupter (See Warnings).

9. Check wall clearances. Be sure you have enough room to work around your pool (18" minimum).

10. Avoid overhanging eaves. Prevent water running off of roof and carrying debris into your pool.

11. Avoid overhanging branches. Prevent leaves and tree branches from falling into your pool.

12. Avoid sun reflection into residence in order to prevent glare into house.

13.Keep sprinklers away from pool to avoid pool damage.

14. Do not install pool under overhead wires (See Warnings).
15. Be able to view children playing around pool. Secure your pool when not in use (See Warnings).

TOOLS AND MATERIALS:

1. Non-Stretch Twine
2. Garden Rake
3. Nail -- 2-1/2" Long (12 Req'd)
4. 18" Long Wooden Stake
5. Duct Tape
6. 2" x 4" Board equal in length to the pool clearance radius plus 6 inches (See "Pool Layout Dimensions")
7. Sifting Screen (to remove 1/8" pebbles)
8. 2" x 12" x 12" Patio Blocks. One per Vertical (Optional)
9. Binder Clips - 1 1/4" - 2" (Available at stationary supply stores)
10. Carpenter's Level
11. Carpenter's Saw
12. Flat End Shovel
13. Screwdrivers (Standard)
14. 25' Tape Measure
15. Hammer
16. Tamping Tool or Roller
17. One or more 5/16" Nut Drivers
18. Sharp Knife or Razor Knife
19. Black Felt Marker
20. Transit (See Step 1)
21. Hacksaw

POOL LAYOUT DIMENSIONS

12' POOL

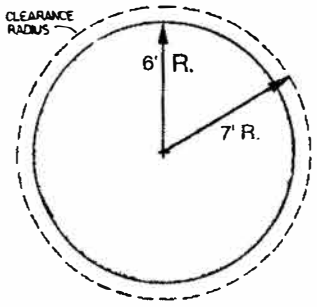

15' POOL

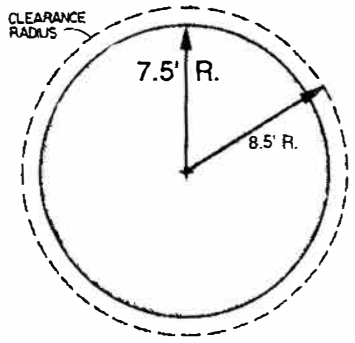

18' POOL

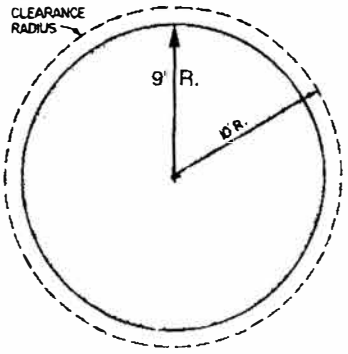

21' POOL

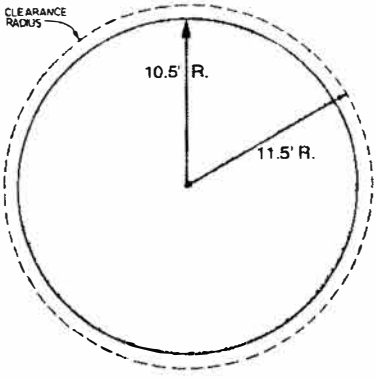

POOL LAYOUT DIMENSIONS (con't)

Study the following illustration of your pool size and familiarize yourself with the dimensions that will be used for your pool layout.

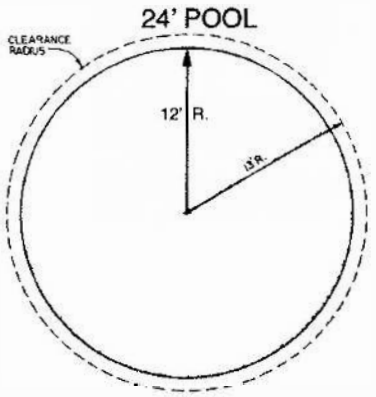

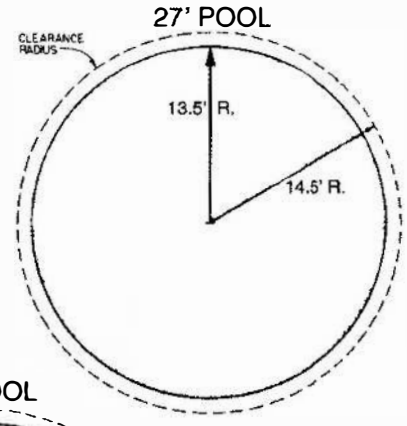

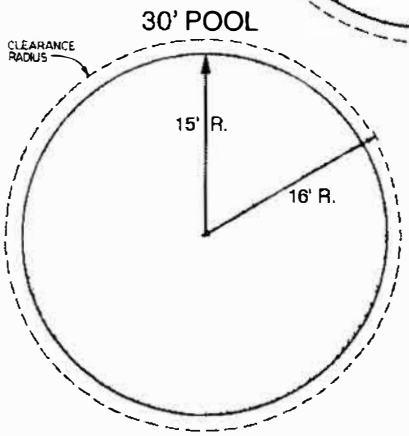

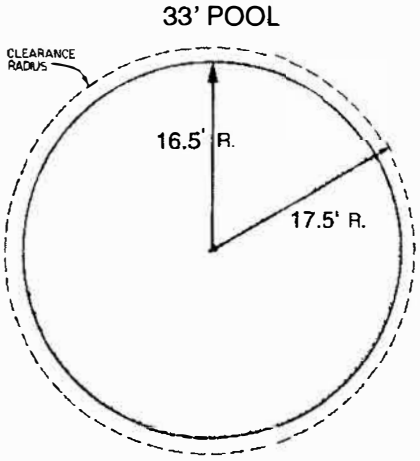

Step 1...

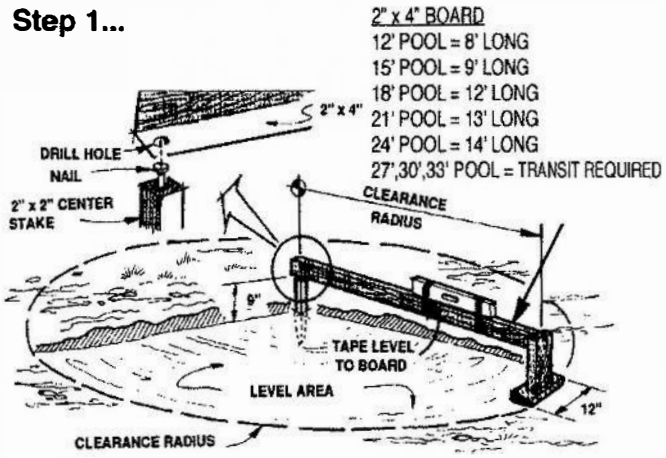

Refer to POOL LAYOUT DIMENSIONS for your pool diameter. Drive stake into ground at pool center. With a shovel and the constructed depth leveling tool shown above, remove sod and level pool area. Level to the lowest spot within circle. **Remove high points - do not fill in low spots. Ground must always be firm.** Be sure pool area is free of stones, sticks, roots and other objects that could puncture liner. Remember: The entire assembled pool framework must sit on flat ground within 1 inch of level at opposite sides. Spend additional time now to avoid disassembly.

Step 2...

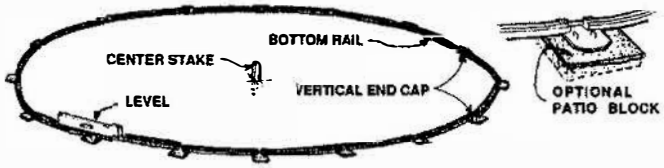

Mark out pool radius, (1/2 pool diameter). Construct bottom framework. Form a circle by sliding bottom rails (groove up) into vertical end caps. Confirm roundness by measuring out to framework from center stake. Confirm levelness by placing level on top of bottom rails. Check around the circle to be sure ground is flat within 1 inch of level at opposite sides. **Patio Block Installation (Optional but recommended):** Center 12" x 12" x 2" patio blocks under vertical end caps and mark their positions with a stick. Move bottom framework out of your way in sections. Turn patio blocks out next to their marked positions and dig soil in the marked locations away to the depth of the patio block. Patio blocks must sit in solid, undisturbed earth, be flush with the ground, and have no movement when turned back into place. Use leveling tools and/or transit to make sure each block is level and that all blocks are level to each other. NOTE: If you plan to use sifted earth for pool cove bring it in to pool area at this time. Reinstall framework. Check again for roundness, and to see that vertical end caps are centered on patio blocks.

Step 3...

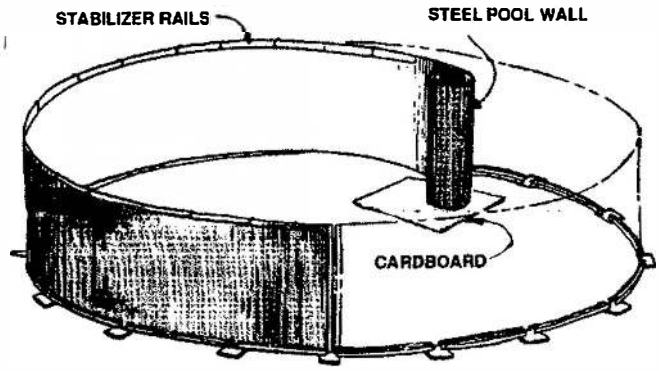

Remove pool wall from carton. **Note "Up Arrow" on wall.** Keep hands and feet from under wall during construction. Determine starting point, start wall end at center of vertical end cap. The skimmer openings will be at the inside end of the wall coil. To aid skimmer, position skimmer opening downwind of prevailing winds. Uncoil about 6 to 10 feet of wall and insert bottom edge into groove on bottom rails. Place stabilizer rails on top edge of pool wall, working around top of pool as wall is inserted into bottom rails. Telescope small diameter rail into large diameter rail about 6 inches. Secure stabilizer rails to wall with duct tape between vertical end caps. Bring wall ends together in center of starting vertical end cap.

Step 4...

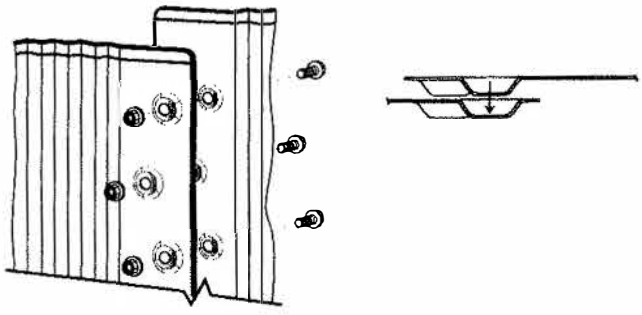

If interlocking wall ends do not meet, adjust all vertical end caps in or out uniformly as required. Do not make the total adjustment with only one or two vertical end caps. Fasten wall with screws supplied in wall carton. Screw head must be on the inside of pool. When finished, go back and retighten all screws and nuts. Remove any burrs on all screw heads. Place protective vinyl strip, included in hardware pack, over screw heads and tape in place.

Step 5...

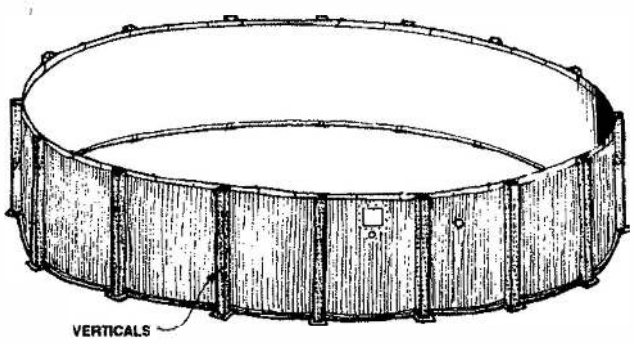

Carefully follow details shown in exploded view on next page to assemble verticals to pool. Use all necessary hardware. Refer to parts list for correct screw locations. Check pool for roundness by measuring across the pool from side to side. Pool diameter should be the same from point to point.

Step 6...

Carefully follow exploded view to attach verticals to vertical end caps. Check for roundness. Check for straightness of verticals using level tool.

Fig. A Exploded view

Parts list has larger version for easier viewing.

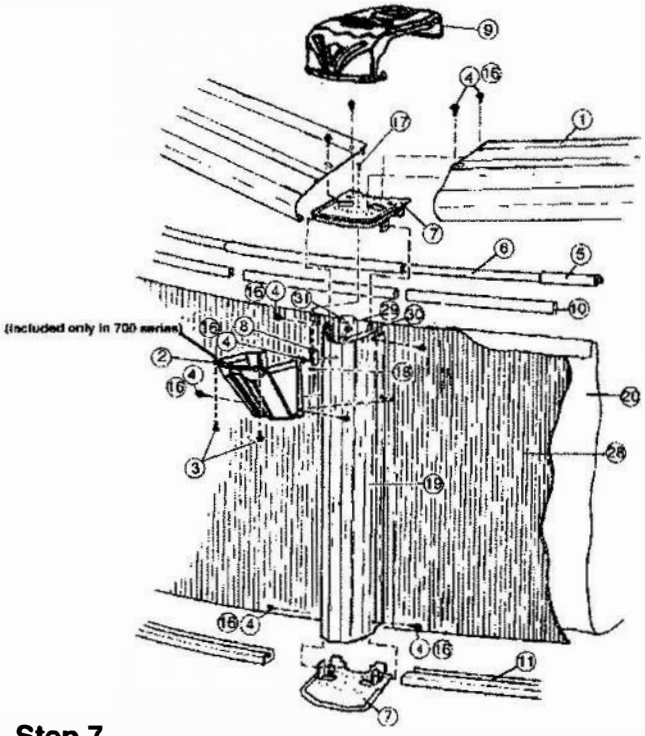

Step 7...

Install Top Rails **Use hole patterns below for your pool size.**

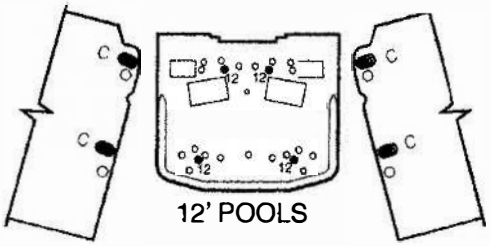

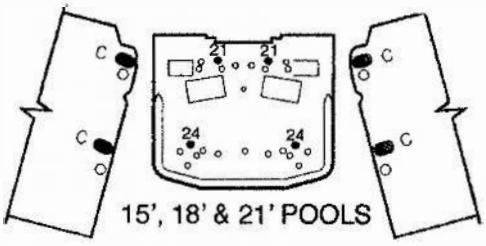

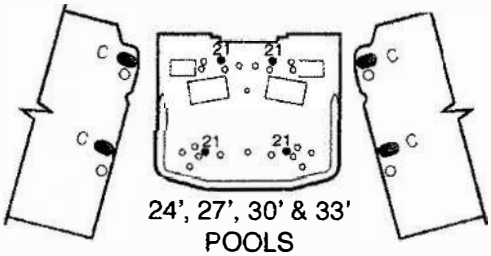

Four #10 x 1/2" screws attach top rails to each end cap. Insert screws through the proper hole in top rail and into proper hole on end cap. From chart, select proper holes (stamped on rails and end caps). HINT: Use felt pen to mark all proper holes before attaching.

Attach all other hardware as required per exploded view. Please refer to larger exploded view in parts list for proper placement and hardware required.

Step 8...

ATTACH TOP CONNECTORS AND SKIRTS (IF INCLUDED)

Attach top connectors to pool. Attach top connector by hooking the front first on the top rail, then swing downward toward the back of the top rail until it snaps in place. Attach skirt with (2) screws to front of top connector, then attach to vertical with (2) #10 x 1/2" screws. Refer to exploded view in parts list for correct screws and location.

Step 9...

COVE

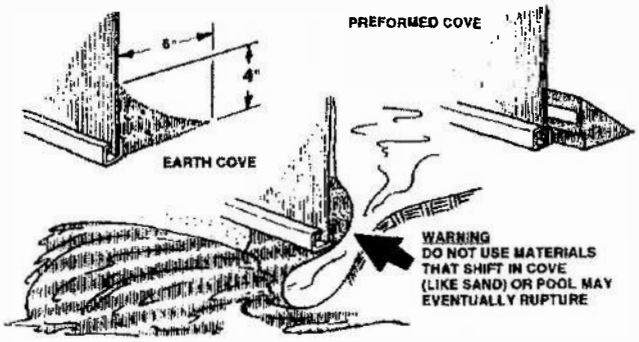

Important Step: The cove is a vital structural element that prevents water pressure from forcing the pool liner out under the bottom rail. The manufacturer will not assume responsibility should the cove be omitted. EARTH COVE: Use screened damp earth to form a cove around the inside base of pool wall. Shape and compact firmly. PRE-FORMED: Specifically designed pre-formed pool cove is available from your dealer. Follow cove manufacturer's instructions. **Recheck pool for roundness after installing cove.**

Step 10...

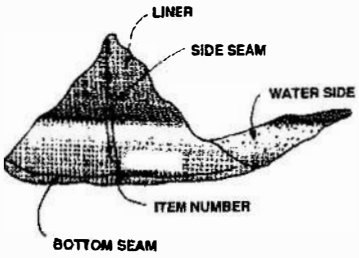

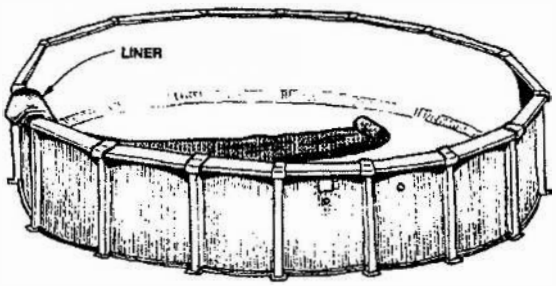

Check the pool floor (area inside pool wall) for levelness. Fill in all slight depressions with sifted earth and tamp. Remove all stones and sharp objects. Fill in all footprints on pool floor. Place liner on top of top rail. The liner should have the loose end overhanging the outside of pool by about 12 inches. Hold end and unfold liner down middle of pool. Do not place liner seam over skimmer or return opening. The center seam of the liner must be positioned at the center line of the pool on 24-foot round pools. For 15 and 18-foot round pools, position the center liner section (not the seam) at the center line of the pool.
NOTE: The embossed side of the liner will be the

Step 11...

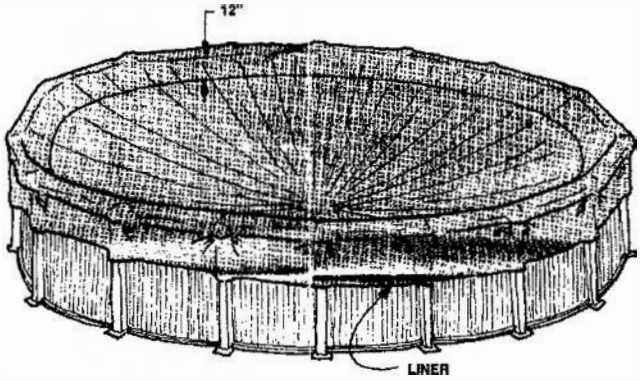

Work in both directions from the point where the liner is overhanging. Unfold liner, drape over the top rail and down the sides approximately 24 inches. The liner should be barely above the pool floor in the center ONLY. Remember that the center seam or center section of the liner must be positioned at the center line of the pool. The bottom edge seam of the liner should be inside the pool about 12 inches below the top rails. Correct any bunching or pleating conditions in the liner wall. Inspect liner for open seams. If found, return to dealer for prompt replacement of

Step 12...



BINDER CLIP & 3" X 3" PIECE OF CARDBOARD TO PROTECT LINER FROM BEING SNAGGED BY CLIP (REFER TO TOOLS & MATERIALS REQUIRED FOR QUANTITY)

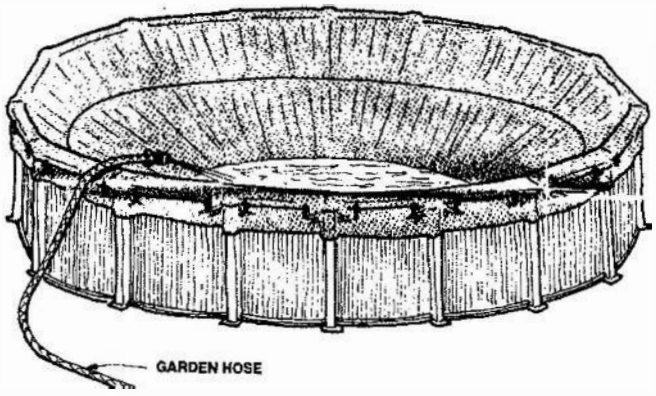

With the liner in position, hold in place by attaching two binder clips over folded cardboard on the underside of each top rail. Carefully cover the end of a garden hose with a sock and tape securely as shown, place it in the pool and begin to fill. As pool fills, the liner will stretch as the water begins to cover the bottom. At this time, check the sidewall for extreme tautness. Binder clips do not self-release. Any area that feels tight should be relieved by releasing the binder clips and allowing the liner to feed back into the pool until the desired tautness is achieved.

Step 13...

CONTINUE FILLING POOL

Adjust liner evenly, all the way around the pool. When properly installed the bottom seam will be approximately midway up the cove. Continue filling until water is 24" up the wall then stop filling. **Never allow liner to fall back into pool.** .

Step 14...

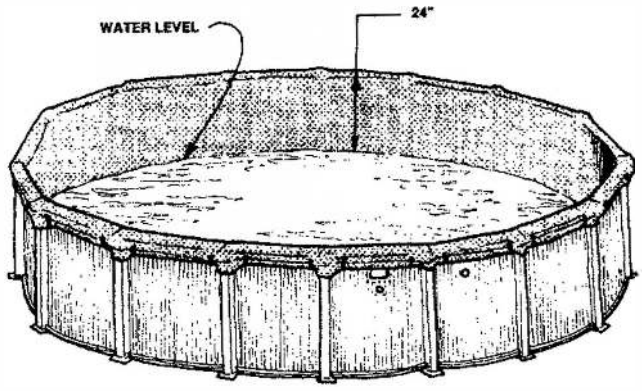

Continue filling pool. **Never allow liner to fall back into pool.** Water between the liner and wall can cause pool failure. When pool has approximately 24 inches of water, stop filling. DO NOT resume until Steps 15, 16, and 17 are completed. **CAUTION:** Do not cut any openings into liner at this time.

Step 15...

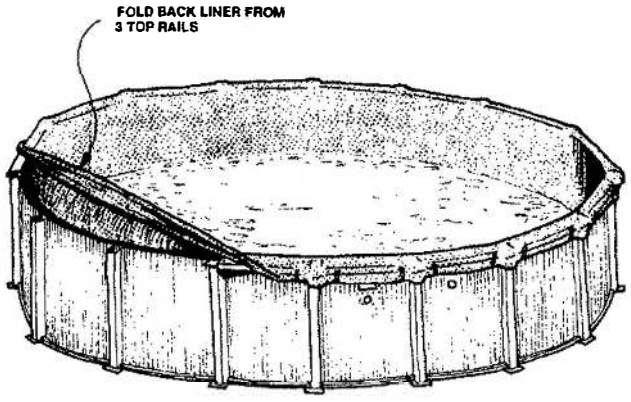

With the help of two or three people, raise and hold the liner up from any three top rail sections. Remove four top connectors, three top rails and two vertical end caps. REMEMBER, NEVER ALLOW LINER TO FALL BACK INTO POOL.

Step 16...

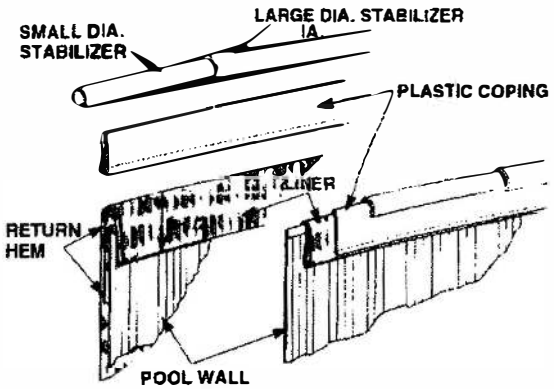

Make a return hem as illustrated. DO NOT cut off excess liner material as the liner will "Slip" from under the plastic coping, causing liner to fall back into the pool. Smooth liner against wall and secure to top of wall with plastic coping. Place stabilizer rails over coping, alternately telescoping small diameter into large diameter about 6 inches as before. One large diameter stabilizer rail fits between each pair of side supports. They DO NOT telescope.

NOTE: At the skimmer and return openings only, the return hem must be cut away between the steel side wall and the liner side wall. (This will insure that there is only onle thickness of liner material covering the skimmer and return openings to affect a positive gasket seal). DO NOT CUT the liner sidewall at any other location. Replace all parts removed in Step 23. Repeat same steps for entire pool perimeter, working just three top rail sections at a time. DO NOT allow liner to fall back into pool.

Step 17...

With pool completely assembled, install skimmer, filter, etc. using instructions provided with units. Consult with your dealer for the proper chemicals and water treatment recommended.

Cleaning
Pool parts are easily cleaned with a mild liquid soap and a soft cloth. Do not use abrasive cleaning pads, or cleaners containing abrasives as they may scratch or dull the surface appearance.

SAFETY LITERATURE

Now that you have installed your new pool, you can look forward to many years of fun and enjoyment. However, your pool is also a big responsibility. For this reason, we have provided you with an assortment of safety literature. **Please take the time to read and understand all the safety literature provided.**

You have also been given an assortment of signs and decals. Refer to your "Safety First" booklet for detailed instructions of where and how to apply them. Remember, warnings only help if you put them up. Please help us protect the good health and safety of your family and friends! Read the "Safety First" booklet through completely and follow the directions in it.

If any of your safety literature, signs, or decals become lost or damaged, you can get more free by contacting HII's Customer Service Department:
HII
315 N. Sebastian Street
West Helena, AR 72390

IMPORTANT: Above-ground pools are designed for swimming and wading only. Diving or Jumping is product mis-use. DO NOT DIVE OR JUMP! Use only an above-ground swimming pool ladder to enter or exit your pool. Do not use slides, diving boards, or any other platform or object which can be used for improper pool entry! **It is your responsibility to secure your pool against unauthorized, unsupervised, or unintentional entry. Remember, pool mis-use can result in severe injury and/or other dangers to life and health.** Always obey and enforce all safety rules.



HII • 315 N. Sebastian St. • West Helena, AR 72390

Made in the United States of America
Copyright © 2014