52” SEMI IN GROUND POLYMER STEP INSTALLATION

All of the supplied 2” PVC pipes **must** be glued into the sockets of the step supports. All available sockets should have a pipe inserted. Use a glue formulated for PVC to ABS such as Oatey All Purpose. Nine pcs 48” are supplied. Cut four pcs 40 3/8” for top tread. Cut four 29 ½” for the middle support. The 18 ½” leftover fits the lower support

Cross drill the lower sections 4” up from the bottom of the 2” pipes and insert rebar to be encapsulated in the concrete.

Concrete collar pour **must** contact the bottom of the first tread.

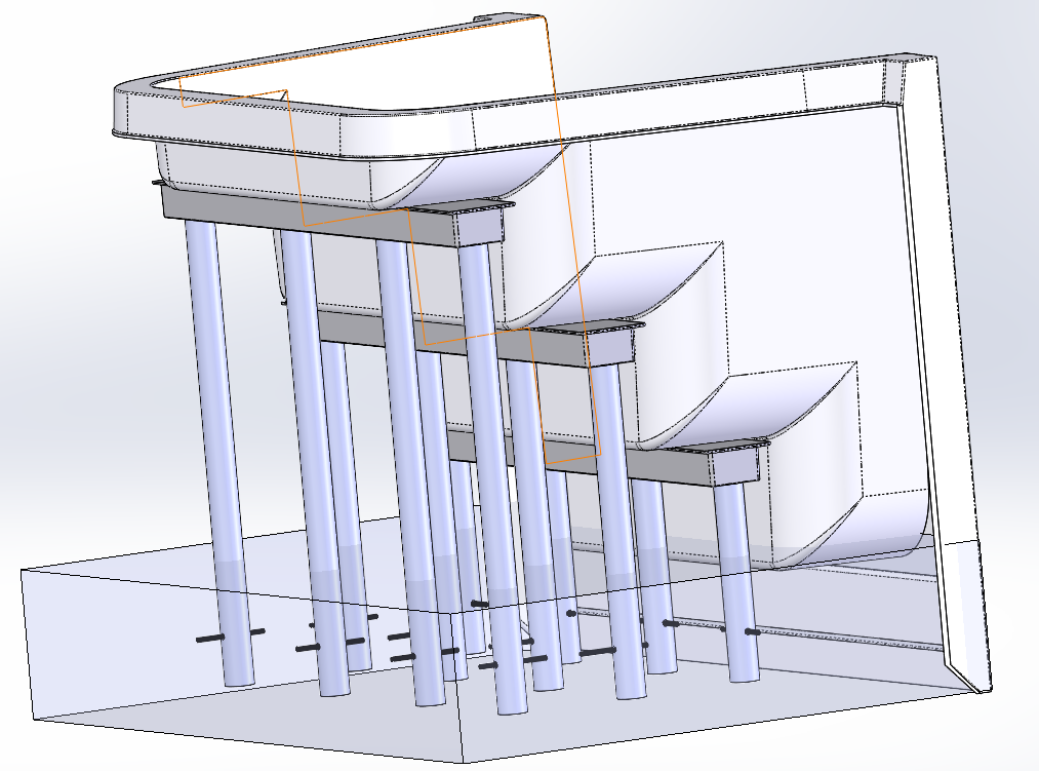

If using the flexible polymer top cap use H043396 (00043396) spacer between the top of wall ledge of the step and line wall up with the top of spacer to set height. Attach spacer to step with tek screws. Top cap and F track can then be attached to the spacer.

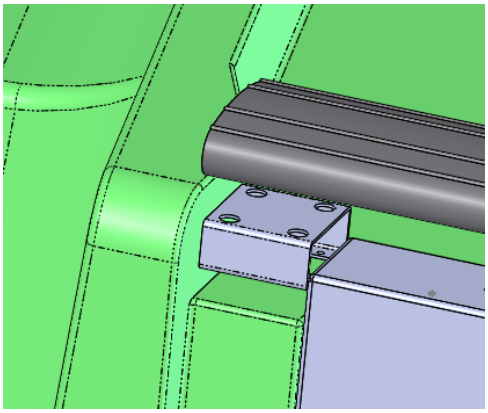

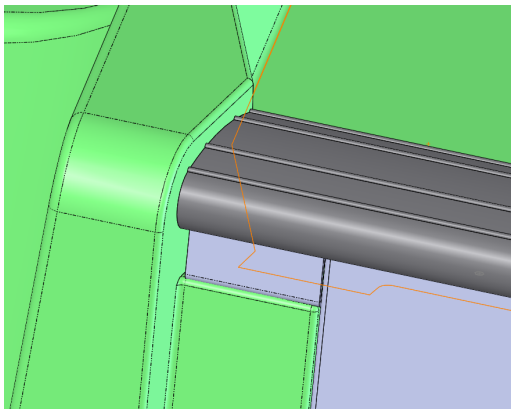

When mounting step to wall panel use the back row of holes. Once step is located and clamped in place drill 3/8” holes through the back row of holes. Place bolt through step flange then wall flange then brace and install nut and tighten.

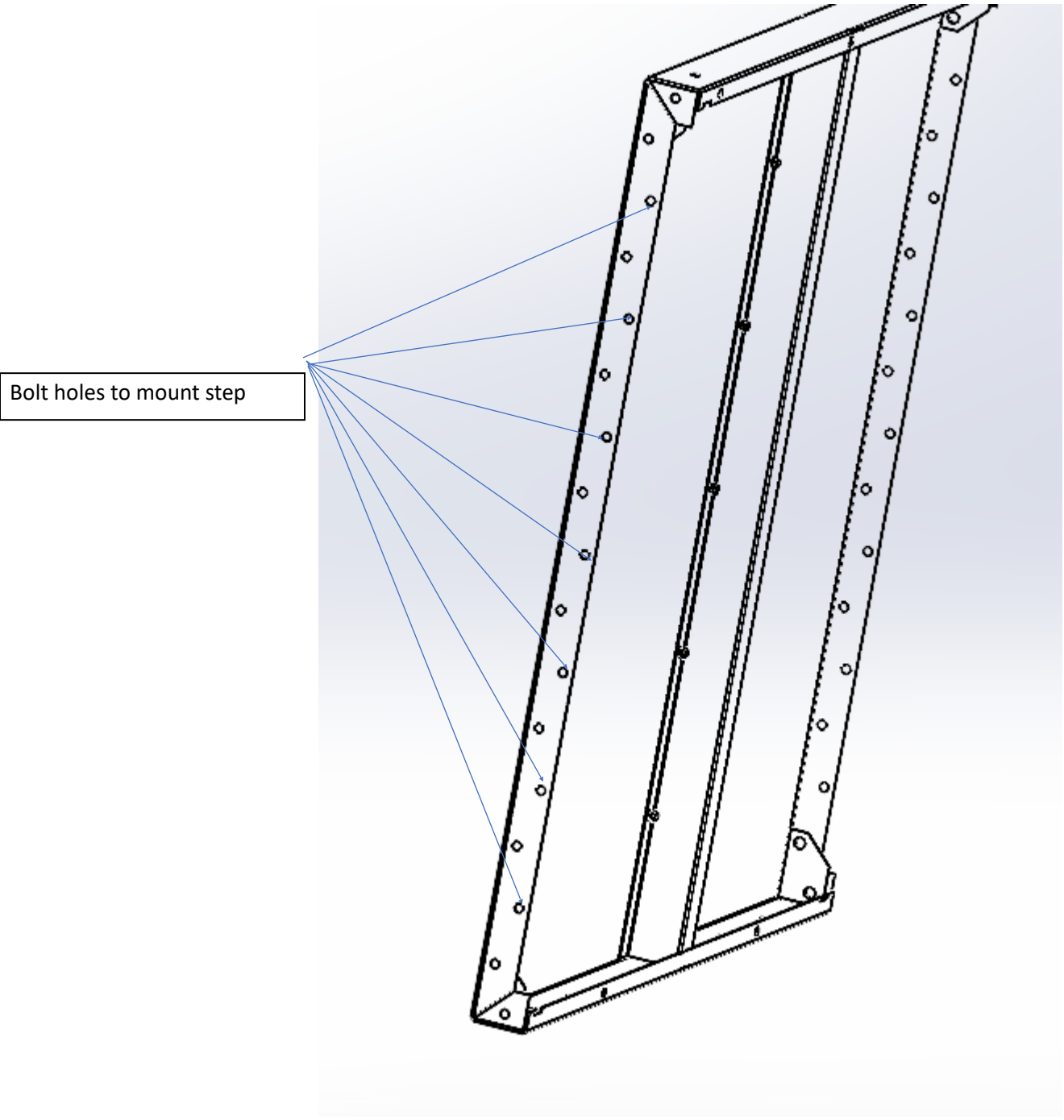

There should be a brace on either side of the step. It should go to the outside of the joint.

Note footing is 10” deep and 28” wide around the perimeter of the pool. Semi inground installations should have the footing at least 10” into the surrounding undisturbed earth. The footing should extend at least 6” past the perimeter of the step.

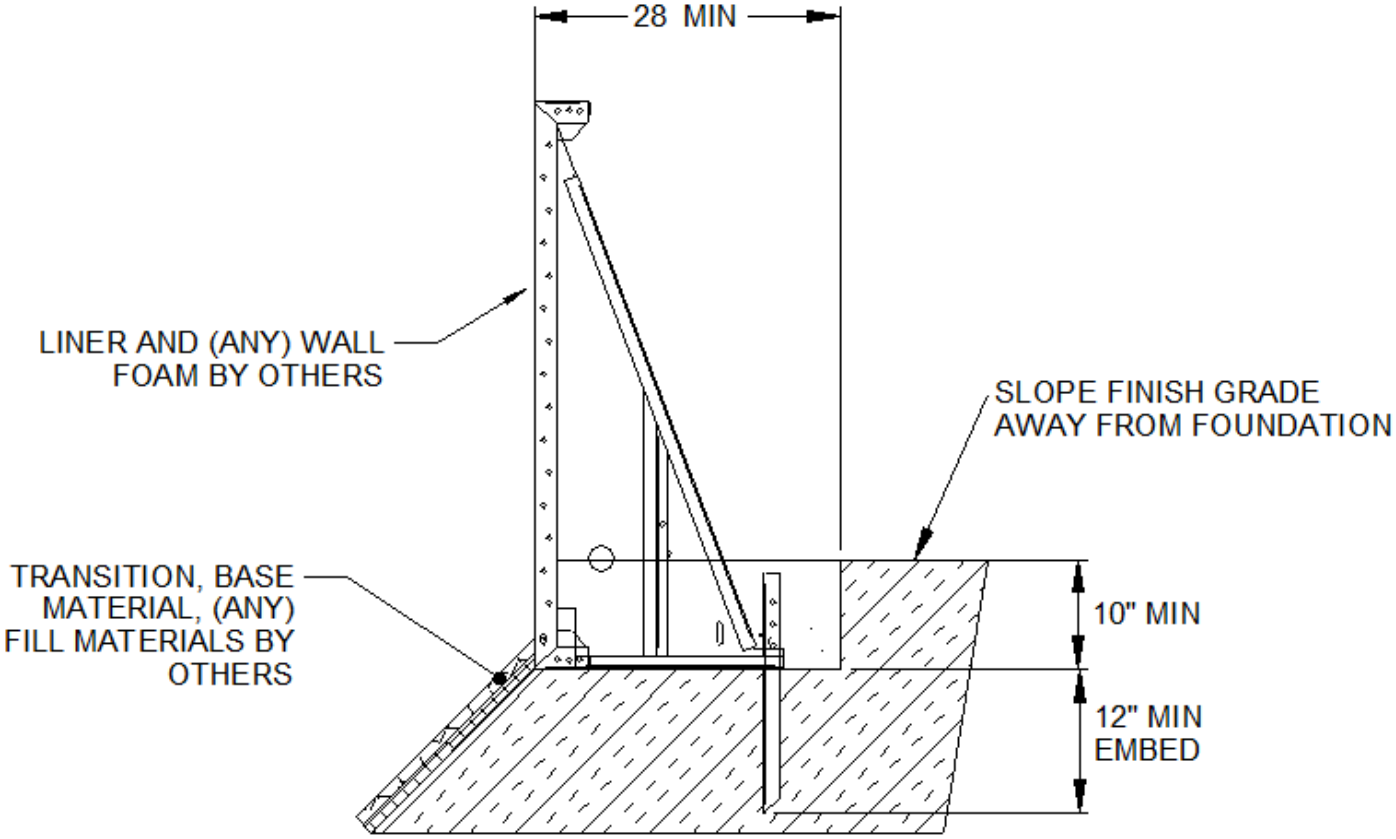
28 MIN
LINER AND (ANY) WALL FOAM BY OTHERS
SLOPE FINISH GRADE AWAY FROM FOUNDATION
TRANSITION, BASE MATERIAL, (ANY) FILL MATERIALS BY OTHERS
10" MIN
12" MIN EMBED

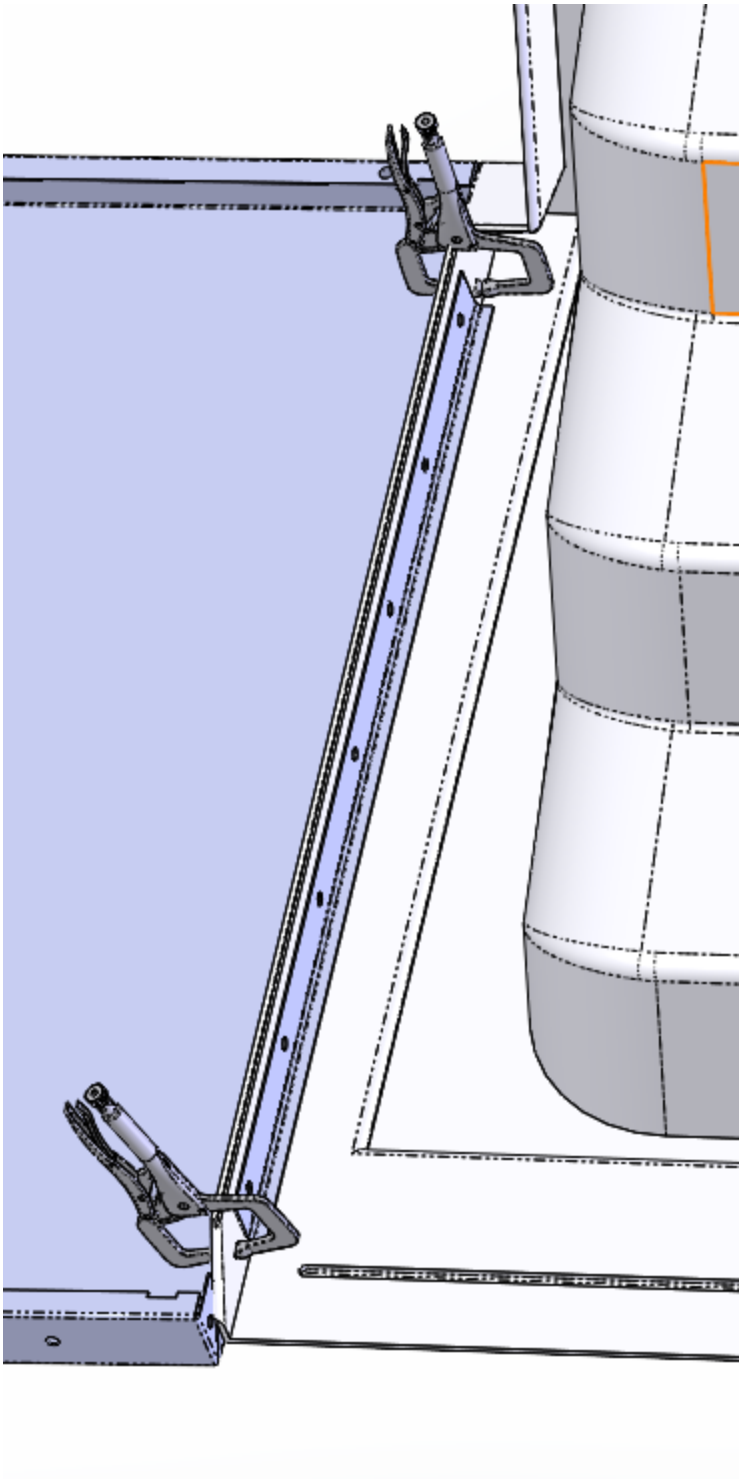

Clamp step to wall. Make sure clamps clear mounting holes. Drill through step flange using back holes in panel flange as a guide. Place bolster (HPSD49629) inside step flange against backside of step front. Install brace insert bolts and tighten. There will only be bolts in the back row of holes on the brace.

If using polymer top cap coping the joints will use straight clips to cover joints and will snap over coping. If the pool has angled joints and angled clips the coping must be cut to fit the angle and inserted into the clip before it is attached to the top of the wall.